DRAWN
Cherry

DATE
12/31/2024

TITLE
Strike V

© Chauvet & Sons, LLC 2024
All Product Specifications and dimensions are subject to change without notice

CHAUVET PROFESSIONAL

SCALE 1 : 1

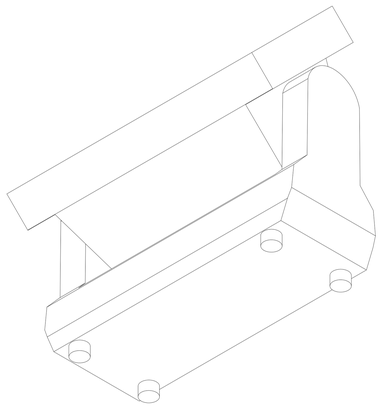

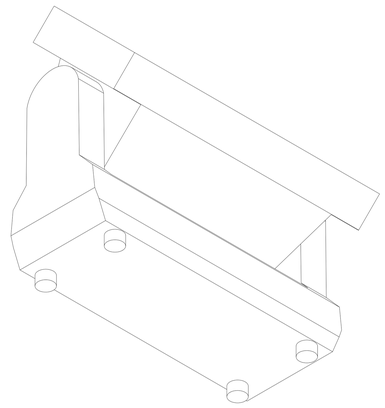

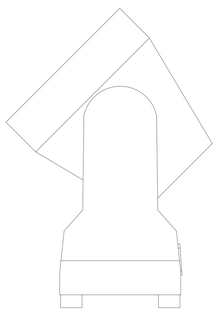

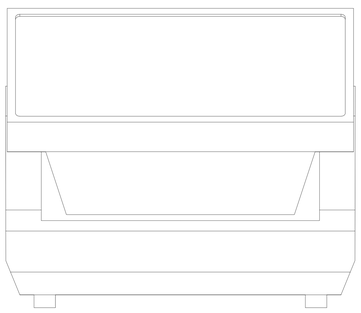

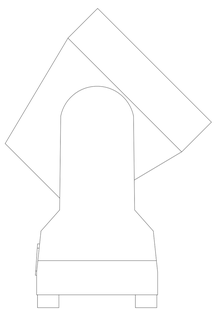

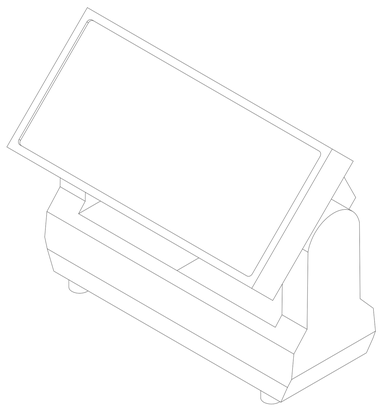

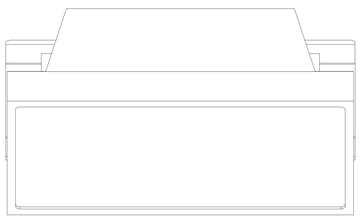

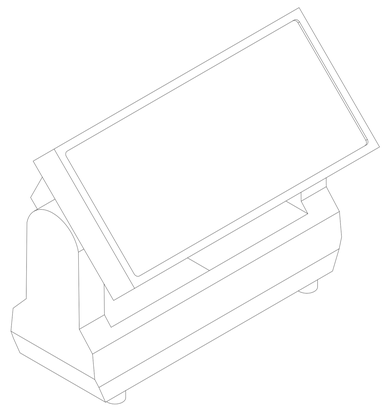

DRAWN	DATE	TITLE
cherny	11/21/2024	Strike V

© Chauvet & Sons, LLC (2024)
All Product specifications and dimensions are subject to change without notice

CHAUVET PROFESSIONAL

SCALE 1 : 1

DRAWN
Cherry

DATE
12/31/2024

TITLE
Strike V

© Chauvet & Sons, LLC 2024
All Product specifications and dimensions are subject to change without notice

CHAUVET PROFESSIONAL

SCALE 1 : 1